Product data sheet

V2D654R-MEWKA6

Lector64x/Lector65x

IMAGE-BASED CODE READERS

SICK
Sensor Intelligence.

Ordering information

Type	Part no.
V2D654R-MEWKA6	1068680

Product is supplied fully assembled. See individual components for further technical data

Other models and accessories → www.sick.com/Lector64x_Lector65x

Detailed technical data

Features

Variant	Complete device
Optical focus	Dynamic focus control
Sensor	CMOS matrix sensor, grayscale values
Sensor resolution	2,048 px x 2,048 px
Illumination	Integrated
Illumination color	White, LED, Visible,
LED class	Risk group 1 (IEC 62471:2006-07, EN 62471:2008-09)
Feedback spot	LED, Visible, green, 525 nm, ± 15 nm
Alignment aid	Laser, Red, 630 nm ... 680 nm
Laser class	1, Complies with 21 CFR 1040.10 and 1040.11 except for conformance with IEC 60825-1 Ed.3., as described in “Laser Notice No. 56” dated May 8, 2019 (IEC 60825-1:2014, EN 60825-1:2014+A11:2021)
Lens	C-mount
Optical format	1″
Focal length	40 mm
Aperture	8
Scanning frequency	40 Hz, With resolution of 4 megapixels
Code resolution	≥ 0.12 mm [1]

[1] Depends on distance.

Mechanics/electronics

Connection type	1 x M12, 17-pin plug (serial, CAN, I/Os, power supply) 2 x M12, 8-pin socket (Ethernet, P1 not yet with function) 1 x M8, 4-pin socket (USB)
Supply voltage	24 V DC, ± 20 %

Power consumption	Typ. 20 W, ± 20 %
Output current	≤ 100 mA
Housing material	Aluminum die cast
Housing color	Light blue (RAL 5012)
Window material	Glass
Enclosure rating	IP65 (EN 60529 (1991-10), EN 60529/A2 (2002-02))
Protection class	III
Electrical safety	EN 60950-1 (2011-01)
Weight	963 g
Dimensions (L x W x H)	142.8 mm x 90 mm x 106.1 mm
MTBF	100,000 h

Performance

Readable code structures	1D codes, Stacked, 2D codes
Bar code types	GS1-128 / EAN 128, UPC / GTIN / EAN, Interleaved 2 of 5, Pharmacode, GS1 DataBar, Code 39, Code 128, Codabar, Code 32, Code 93, USPS (Postnet, Planet, USPS4SCB), Australian Post, Dutch KIX Post, Royal Mail, Swedish Post
2D code types	Data Matrix ECC200, GS1 Data-Matrix, MaxiCode, QR code
Stacked code types	PDF417
Code qualification	On the basis of ISO/IEC 16022, ISO/IEC 15415, ISO/IEC 18004
Internal image storage	512 MB

Interfaces

Ethernet	✓, TCP/IP
Function	Data interface (read result output), Service interface, FTP (image transmission)
Data transmission rate	10/100/1,000 Mbit/s
PROFINET	✓
Function	PROFINET Single Port (integrated), PROFINET Dual Port (optional via external connection module CDF600-2)
EtherNet/IP™	✓
Data transmission rate	10/100/1,000 Mbit/s
Serial	✓, RS-232, RS-422
Function	Data interface (read result output), Service interface
Data transmission rate	0.3 kBaud ... 115.2 kBaud, AUX: 57.6 kBaud (RS-232)
CAN	✓
Function	SICK CAN sensor network CSN (CAN controller/CAN device, multiplexer/server)
Data transmission rate	20 kbit/s ... 1 Mbit/s
PROFIBUS DP	✓
Type of fieldbus integration	Optional over external fieldbus module CDF600-2
Digital inputs	4 (“Sensor 1”, “Sensor 2”, 2 inputs via optional CMC600 parameter memory in CDB650/CDM420)
Configurable inputs	Encoder input, external trigger
Digital outputs	6 (CDB650: “Result 1”, “Result 2”, “Result 3”, “Result 4”, 2 external outputs via CMC600 or CDM420: “Result 1”, “Result 2”, 2 external outputs via CMC600 or cable with open end: “Result 1”, “Result 2”, “Result 3”, “Result 4”)
Configurable outputs	Good read, External illumination control, free configurable output condition, "device ready"

Reading pulse	Digital inputs, non-powered, serial interface, Ethernet, CAN, auto pulse, presentation mode
Optical indicators	21 LEDs (10 x status display, 10 x LED bar graph, 1 green feedback spot)
Acoustic indicators	Beeper/buzzer (can be switched off, can be assigned a function to signal a result)
Control elements	2 buttons (choose and start/stop functions)
Operator interfaces	Web server
Configuration software	SOPAS ET
Memory card	Micro SD memory card (flash card) max. 16 GB, optional
Data storage and retrieval	Image and data storage via microSD memory card and external FTP
EncoderFrequency	Max. 1 kHz
External illumination control	Via digital output (max. 24 V trigger) or external illumination connection

Ambient data

Electromagnetic compatibility (EMC)	EN 61000-6-2:2005-08 / EN 61000-6-3 (2007-01)
Vibration resistance	EN 60068-2-6:2008-02
Shock resistance	EN 60068-2-6
Ambient operating temperature	0 °C ... +50 °C
Storage temperature	–20 °C ... +70 °C
Permissible relative humidity	90 %, Non-condensing
Ambient light immunity	2,000 lx, on code

Classifications

ECLASS 5.0	27280103
ECLASS 5.1.4	27280103
ECLASS 6.0	27280103
ECLASS 6.2	27280103
ECLASS 7.0	27280103
ECLASS 8.0	27280103
ECLASS 8.1	27280103
ECLASS 9.0	27280103
ECLASS 10.0	27280103
ECLASS 11.0	27280103
ECLASS 12.0	27280103
ETIM 5.0	EC002550
ETIM 6.0	EC002550
ETIM 7.0	EC002999
ETIM 8.0	EC002999
UNSPSC 16.0901	43211701

Dimensional drawing (Dimensions in mm (inch))

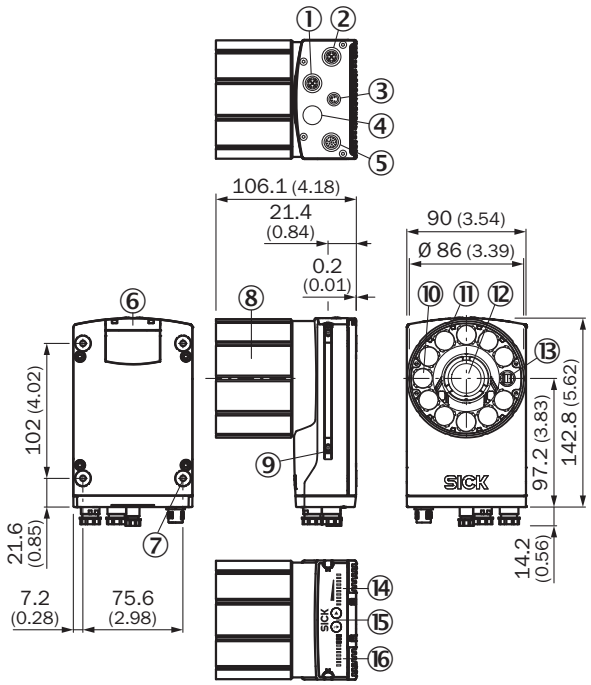

① "Ethernet" P1 connection
② P3 connection "Ethernet"
③ X2 "USB" connection or "trigger external lighting", depending on type
④ P2 connection "CAN OUT", depending on type
⑤ X1 "Power/Serial Data/CAN/I/O" connection or "CAN IN", depending on type
⑥ Cover for the microSD memory card
⑦ M5 blind tapped holes, 5 mm deep (4 x), for mounting the sensor
⑧ Optics protection hood
⑨ Sliding nut M5, 5.5 mm deep (2 x), for mounting (as alternative)
⑩ Green feedback LED
⑪ Ring lighting
⑫ Lens
⑬ Laser alignment aid exit
⑭ Bar graph display
⑮ Function button (2 x)
⑯ LED for status display (2 levels), 10 x

Field of view

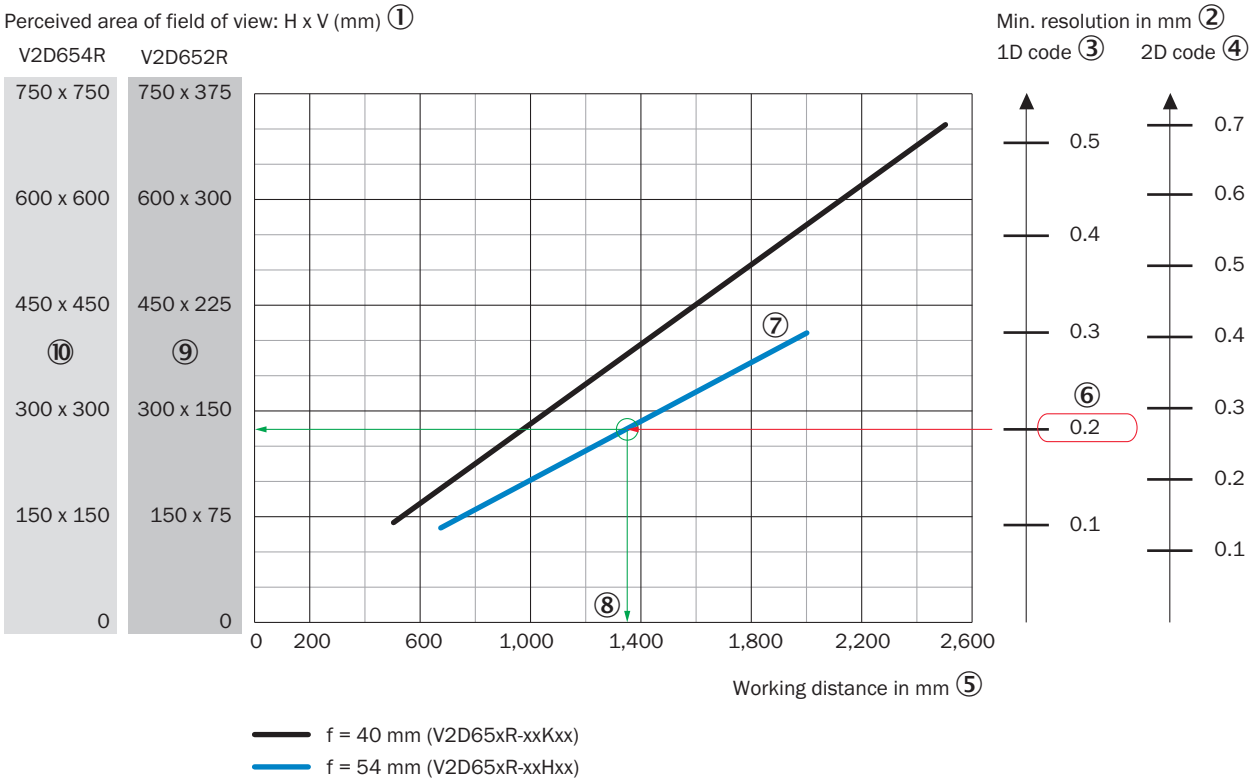

① Perceived field of view area: horizontal x vertical (mm)
② Minimum resolution in mm
③ 1D code
④ 2D code
⑤ Working distance in mm
⑥ Selected code resolution
⑦ Focal length of lens, here example for f = 54.0 mm
⑧ Reading off: resultant maximum working distance
⑨ Reading off: Resulting perceived area of the field of view V2D652R (mm x mm)
⑩ Reading off: Resulting perceived area of the field of view V2D654R (mm x mm)

Field of view, Lector65x Dynamic Focus with Panorama 35 mm/40 mm

Dimensions in mm (inch/*mil)

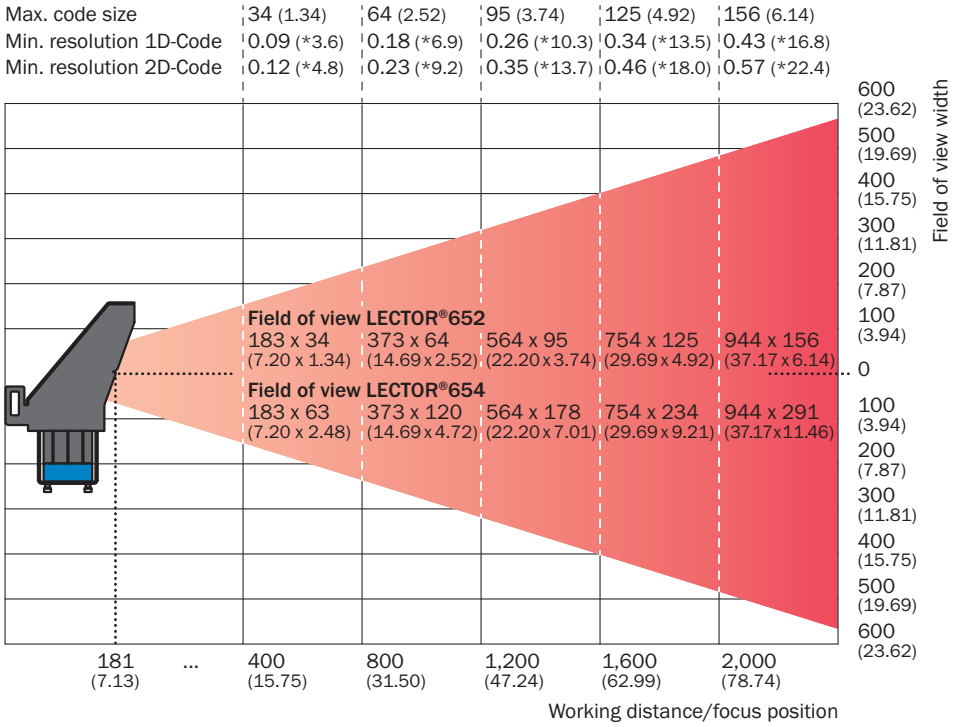

Recommended accessories

Other models and accessories ➜ www.sick.com/Lector64x_Lector65x

	Brief description	Type	Part no.
Others			
	• **Connection type head A:** Male connector, M12, 8-pin, straight, X-coded • **Connection type head B:** Male connector, RJ45, 8-pin, straight • **Signal type:** Ethernet, Gigabit Ethernet • **Cable:** 2 m, 8-wire, PUR, halogen-free • **Description:** Ethernet, Gigabit Ethernet, shielded • **Application:** Zones with oils and lubricants	YM2X18-020EG1MRJA8	2106258
	• **Connection type head A:** Male connector, M12, 8-pin, straight, X-coded • **Connection type head B:** Male connector, RJ45, 8-pin, straight • **Signal type:** Ethernet, Gigabit Ethernet • **Cable:** 3 m, 8-wire, PUR, halogen-free • **Description:** Ethernet, Gigabit Ethernet, shielded • **Application:** Zones with oils and lubricants	YM2X18-030EG1MRJA8	2145693

Recommended services

Additional services ➜ www.sick.com/Lector64x_Lector65x

	Type	Part no.
Performance check		
• **Product area:** Image-based code readers • **Range of services:** Inspection of defined functions, e.g., reading performance • **Duration:** Additional work will be invoiced separately	Performance check Lector	1608207
Maintenance		
• **Product area:** Image-based code readers • **Range of services:** Inspection, analysis and restoring of defined functions, Inspection and adaptation of previously defined functions of possible Lector6xx illumination, code configuration, trigger and digital inputs, interfaces and digital outputs as well as data processing • **Duration:** Additional work will be invoiced separately	Maintenance Lector	1611421
Commissioning		
• **Product area:** Image-based code readers • **Range of services:** Inspection of connection, fine adjustment, optimization of parameters of SICK product as well as tests, Set-up of previously defined functions of possible illumination, code configuration, trigger and digital inputs, interfaces and digital outputs as well as data processing • **Duration:** Additional work will be invoiced separately	Commissioning Lector	1608206
Extended warranty		
• **Product area:** Machine vision, LiDAR sensors, safety camera sensors, Safety laser scanners, Safety radar sensors, Radar sensors, Fixed mount barcode scanners, Image-based code readers, RFID, Mobile handheld scanners • **Range of services:** The services correspond to the scope of the statutory manufacturer warranty (SICK general terms of delivery). • **Duration:** Five-year warranty from delivery date.	Extended warranty for a total of five years from delivery date	1680671
Service agreements		
• **Product area:** Robot guidance systems, Track and trace systems, Driver assistance systems, Object detection systems, Profiling systems, Gateway systems, Quality control systems • **Range of services:** Maintenance, Troubleshooting, extended warranty, 8/5 remote support, 8/5 help desk • **Duration:** Duration is arranged individually with the customer and defined in the contract	Bronze service agreements for Systems	1616164

SICK AT A GLANCE

SICK is one of the leading manufacturers of intelligent sensors and sensor solutions for industrial applications. A unique range of products and services creates the perfect basis for controlling processes securely and efficiently, protecting individuals from accidents and preventing damage to the environment.

We have extensive experience in a wide range of industries and understand their processes and requirements. With intelligent sensors, we can deliver exactly what our customers need. In application centers in Europe, Asia and North America, system solutions are tested and optimized in accordance with customer specifications. All this makes us a reliable supplier and development partner.

Comprehensive services complete our offering: SICK LifeTime Services provide support throughout the machine life cycle and ensure safety and productivity.

For us, that is “Sensor Intelligence.”

WORLDWIDE PRESENCE:

Contacts and other locations –www.sick.com

SICK
Sensor Intelligence.